ICOM

IC-2GXA IC-2GXE IC-2GXAT IC-2GXET

SCHEMATIC DIAGRAM

BLOCK DIAGRAM

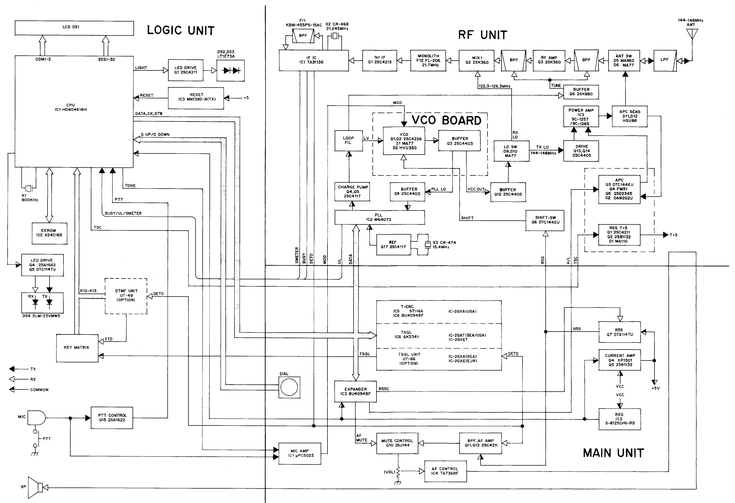

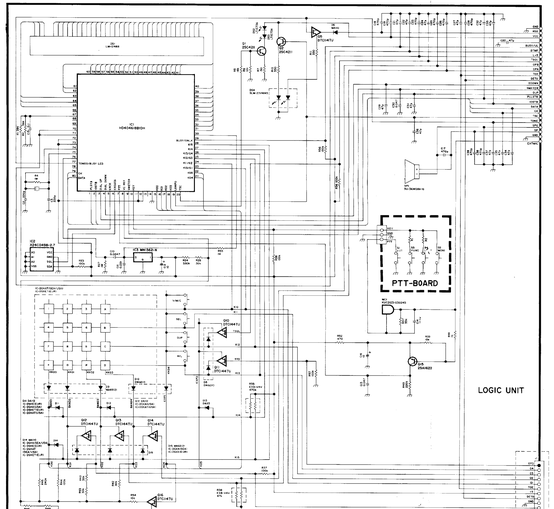

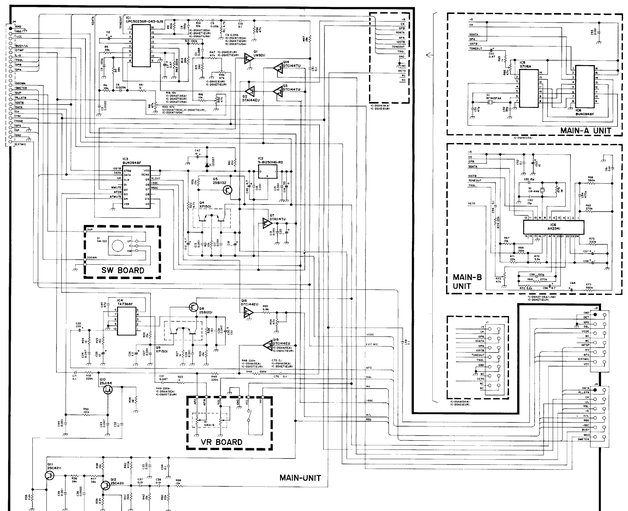

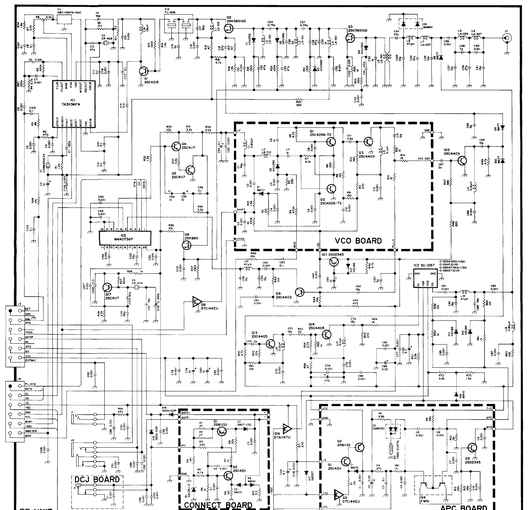

To upgrade quality, some components may be subject to change without notice.

A-3263S-2EX
Printed in Japan
Copyright © 1999 by Icom Inc.

Icom Inc.