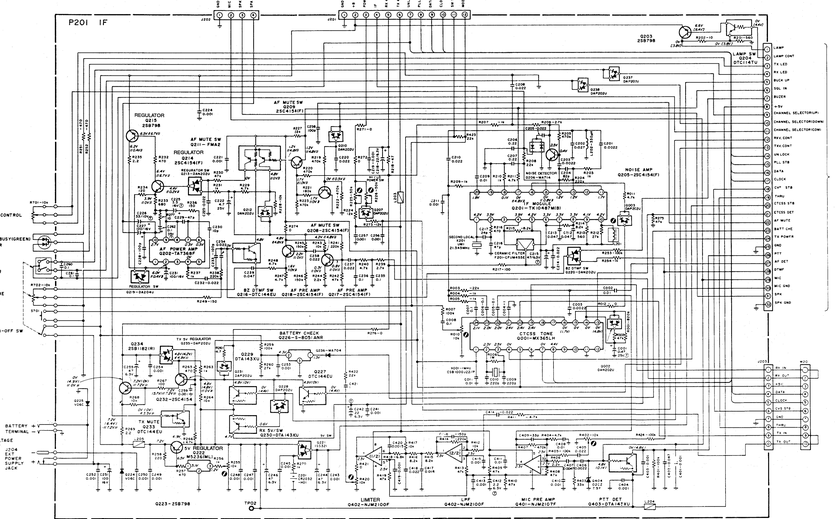


Figure 7-5. HX240V P201 IF Schematic

NOTES:
1. REFER TO PARTS LIST FOR COMPONENT VALUES
2. UNLESS OTHERWISE NOTED RESISTOR VALUES ARE IN OHMS AND CAPACITOR VALUES ARE IN MICROFARADS.
3. VOLTAGE NOTATIONS ARE AS FOLLOWS:
( ) ----- TX (LOW)
( ) ----- TX (HIGH)
( ) ----- UNLOCK
( ) ----- SQL ON
( ) ----- LAMP ON
NOMARKING ----- RX

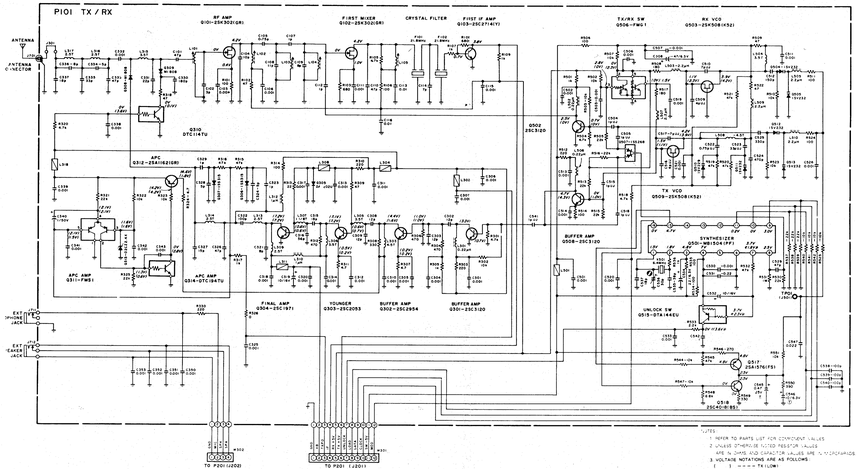


NOTES:
1. REFER TO PARTS LIST FOR COMPONENT VALUES
2. UNLESS OTHERWISE NOTED RESISTOR VALUES ARE IN OHMS AND CAPACITOR VALUES ARE IN MICROFARADS.
3. VOLTAGE NOTATIONS ARE AS FOLLOWS:
( ) ----- TX (LOW)
( ) ----- TX (HIGH)
( ) ----- UNLOCK
( ) ----- SQL ON
( ) ----- LAMP ON
NOMARKING ----- RX

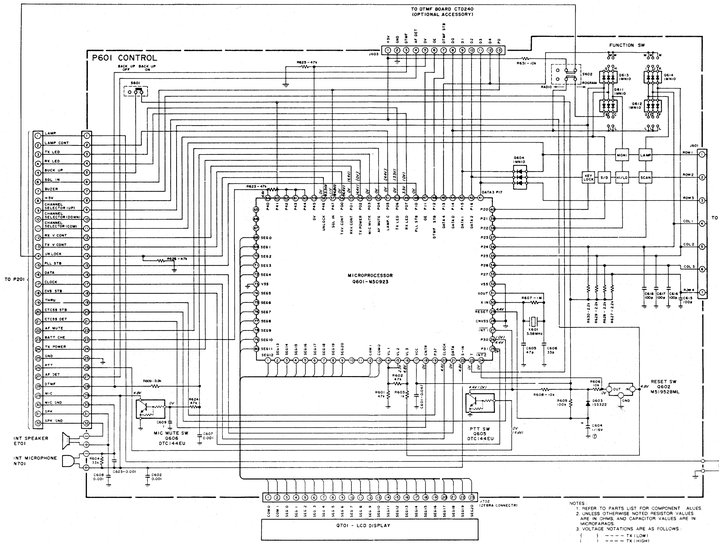


NOTES:
1. REFER TO PARTS LIST FOR COMPONENT VALUES
2. UNLESS OTHERWISE NOTED RESISTOR VALUES ARE IN OHMS AND CAPACITOR VALUES ARE IN MICROFARADS.
3. VOLTAGE NOTATIONS ARE AS FOLLOWS:
( ) ----- TX (LOW)
( ) ----- TX (HIGH)
( ) ----- UNLOCK
( ) ----- SQL ON
( ) ----- LAMP ON
NOMARKING ----- RX

Figure 7-7. HX240V P601 Control Schematic