scan & edit UN7GET

FRONT CONTROL UNIT

DR-599

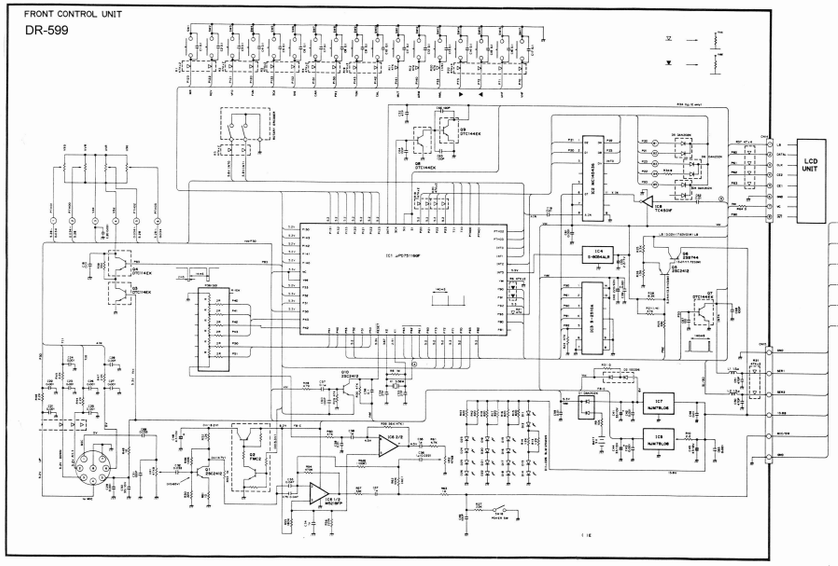

SUB CONTROL UNIT

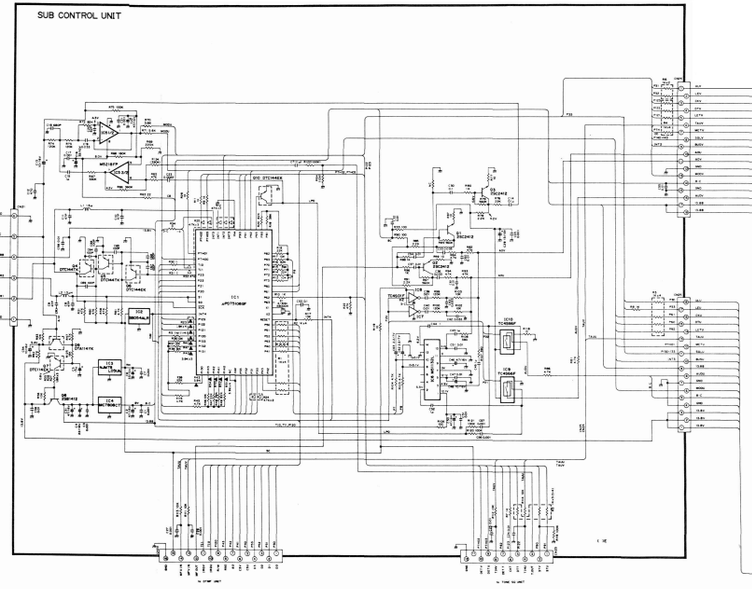

VHF MAIN UNIT

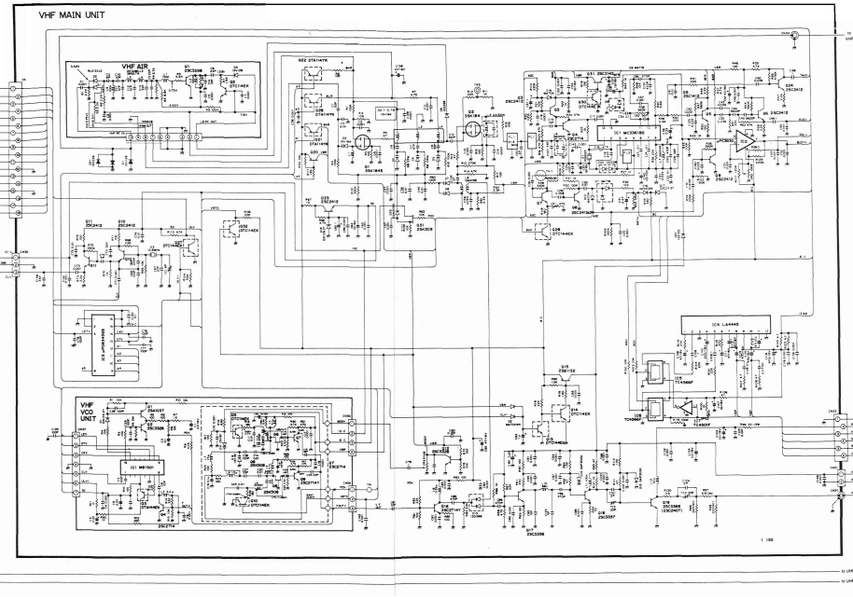

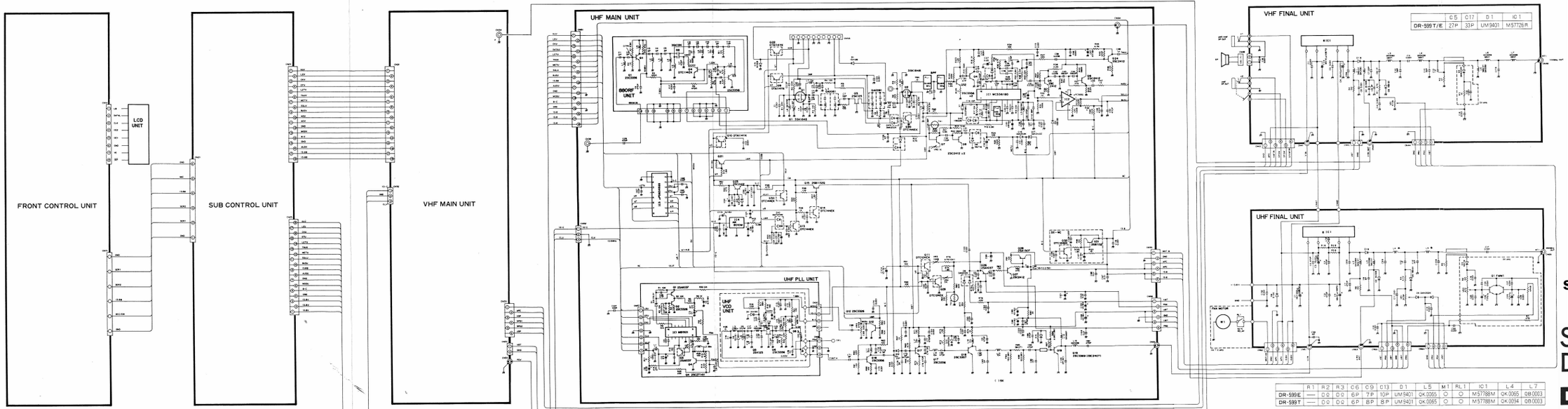

	C5	C17	D1	IC1
DR-599T/E	27P	33P	UM9401	M57726R

	R1	R2	R3	C6	C9	C13	D1	L5	M1	RL1	IC1	L4	L7
DR-599E	—	0Ω	0Ω	6P	7P	10P	UM9401	QK0065	○	○	M57788M	QK0065	QB0003
DR-599T	—	0Ω	0Ω	6P	8P	8P	UM9401	QK0065	○	○	M57788M	QK0094	QB0003

scan & edit
UN7GET

SCHEMATIC DIAGRAM

DR-599T/E

Specifications are subject to change without notice or obligation.